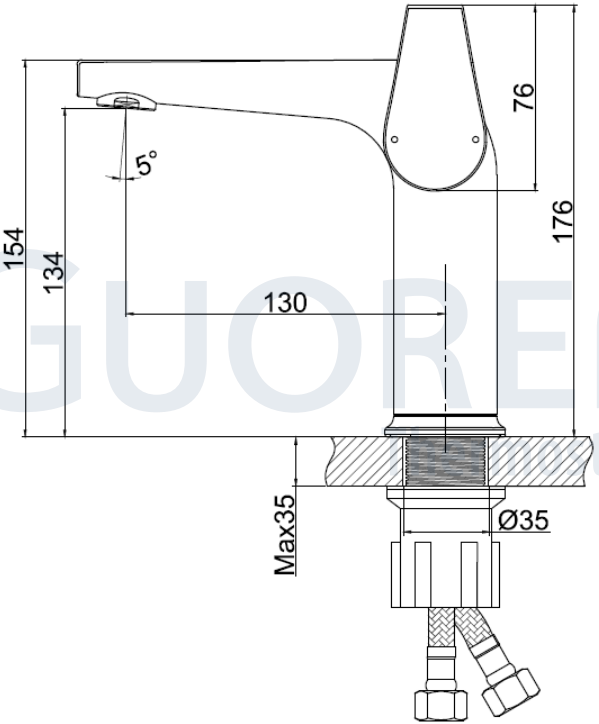

GUOREN
static