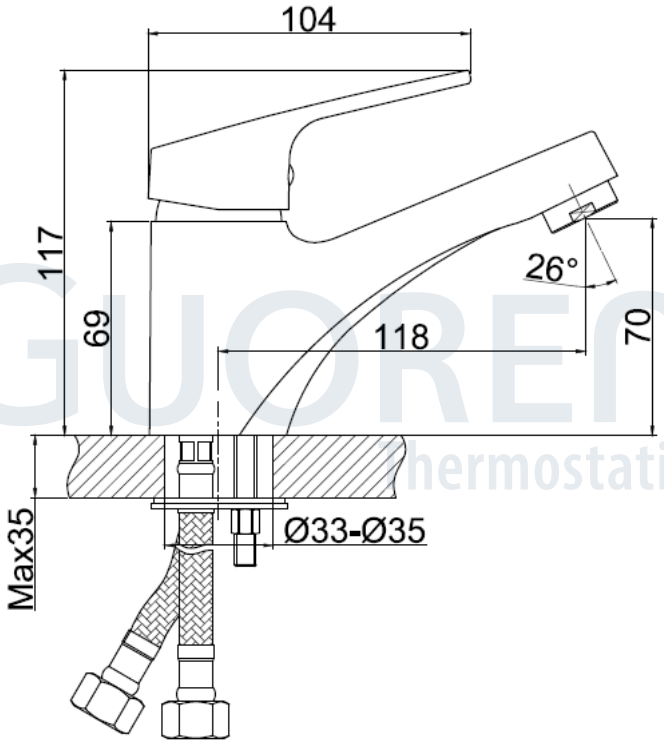


GUOREN
thermostatic