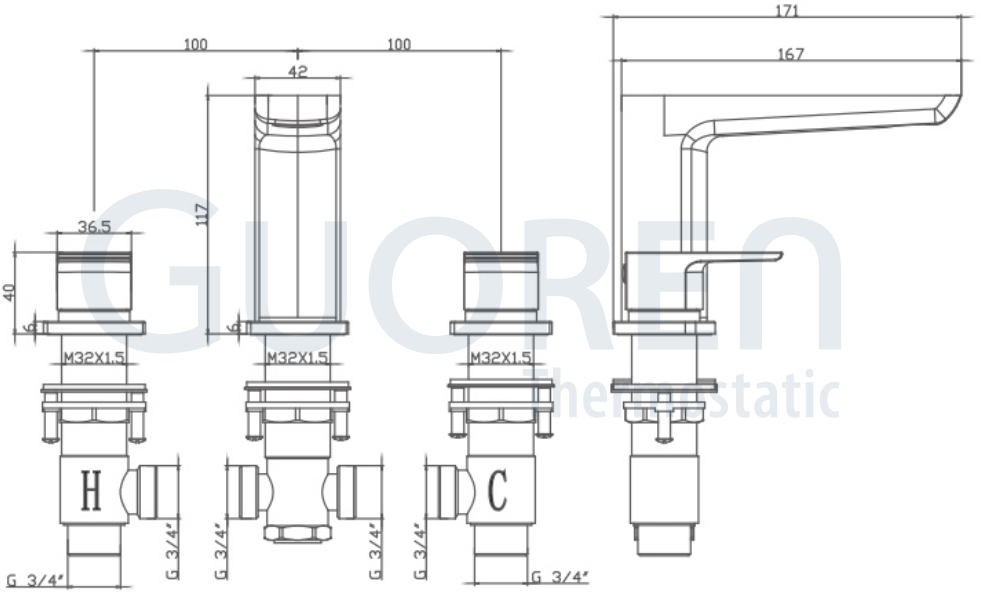

GUOREN
thermostatic